EVERDRY® - Adsorption Dryers FRP

Tailor made to suit your Compressed Air Treatment

Functional Description

Construction up to Standard Type Size 3400

PURGE

- **Fully automatic for continuous operation**
- **Desorption in counter flow direction to the adsorption process with heated blower air**
- **Cooling by pressure released partial stream of dried compressed air**
- **Flow beneficial butterfly valves for low pressure drop**

Adsorption Phase

Humid compressed air enters the dryer inlet and flows via valve **K1** into the adsorption vessel **B1**. The flow distributor ensures even distribution of the humid compressed air. While the humid compressed air passes through the vessel, the humidity is adsorbed by the desiccant. The dried compressed air is supplied to the points of use via outlet valve **R1** and the dryer outlet. The termination of the adsorption process is time- or dew-point-controlled (optional)

The adsorption is implemented bottom-up.

Desorption Phase

While the compressed air is dried in adsorption vessel **B1**, adsorption vessel **B2**, saturated with moisture, is regenerated. Prior to the start of regeneration, the pressure in adsorption vessel **B2** is gently reduced to atmospheric pressure. In the systems of the FRP series, desorption is implemented by sucking in ambient air. The regeneration blower supplies the ambient air to the downstream heater, where the blower air is heated to the required desorption temperature. The **temperature increase** due to the regeneration blower has a positive effect on the power demand of the heater.

The heated blower air flow is supplied via valve **R4** into adsorption vessel **B2** to be desorbed. The moisture adsorbed by the desiccant vaporises and is released into the atmosphere by the blower air flow via valve **K4.**

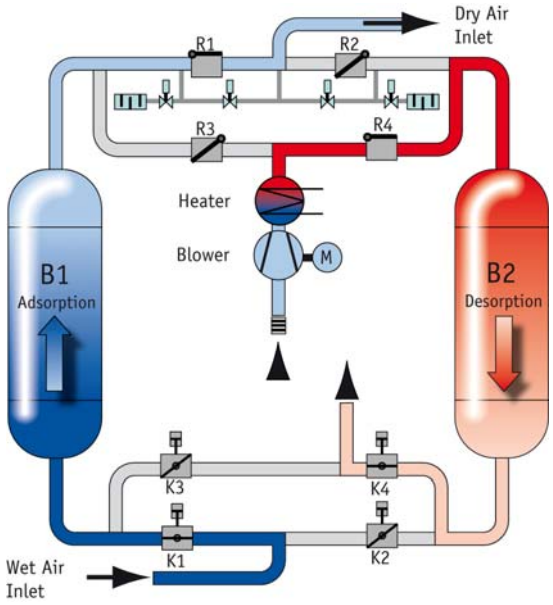

Desorption in counter current flow to the adsorption direction from top to bottom

Desorption takes place in an energetically optimised manner using a **reverse current process**. The moisture thus leaves the adsorption vessel along the shortest possible route to be released into the atmosphere.
Due to the evaporation of the water, the heated blower air cools down when flowing through adsorption vessel **B2**.
Therefore, the outlet temperature of the desorption air is not much higher than the evaporation temperature (approx. 40 – 60°C). Through the desorption process, the moisture content in the desiccant bed is reduced. With the decreasing moisture content, the outlet temperature of the desorption air rises. The desorption phase is finished as soon as the required process temperature has been reached

Cooling Phase

In order to avoid temperature and dew point peaks after the change-over, the heat (stored in the desiccant subsequent to the desorption phase) is discharged along with an expanded dry-air partial flow. Cooling takes place top down in a reverse current process, meaning the opposite to the adsorption direction. The use of dried compressed air for the cooling phase prevents preloading of the desiccant, leads to after-desorption in the desiccant and thus improves the quality of regeneration. After the cooling phase has been terminated, regeneration valve **K4** closes. The regenerated adsorption vessel **B2** is slowly pressurized. Subsequent to pressure equalisation, the system is in the standby phase.

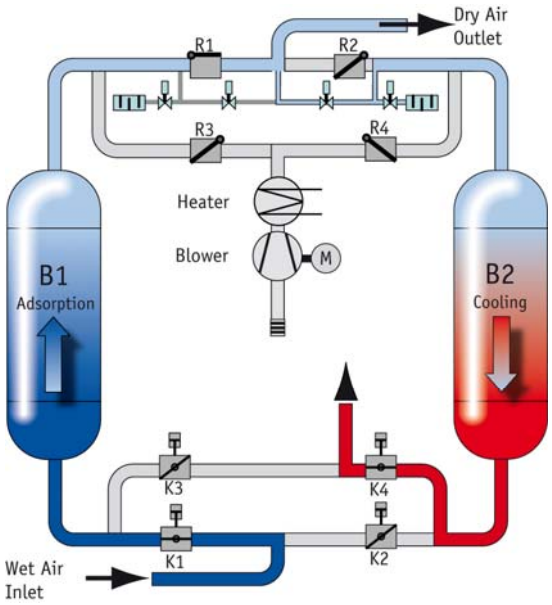

Cooling in the same direction of flow like the adsorption process, from bottom to top

Standby Phase

In the event that the adsorption phase is monitored and terminated by a dew-point-dependent control (optional) the duration of the standby phase depends on the loading condition in the adsorption vessel (here **B1**). The switch-over process will only be initiated when the maximum desiccant capacity has been reached (rise of the pressure dew point). If the plant operates in the "time-dependent switch-over" mode, the switch over procedure will start when the preset cycle time has expired.

Parallel Phase

Before the switch-over process of the adsorption vessels (here from **B1** to **B2**) is initiated, both vessels are switched to parallel function by opening the inlet valve (here **K2**). For approximately 5 to 15 minutes (individually adjustable), the compressed air flows through both adsorption vessels.

Switch-over Procedure

Subsequent to the completion of the parallel phase, the switch-over to the regenerated adsorption vessel (here **B2**) is implemented in the following step

- Closing of the inlet valve (here **K1**) at the loaded adsorption vessel (here **B1**)
- Closing of the pressure build-up valve
- Opening of the pressure relief valve for the adsorption vessel to be regenerated (here **B1**)
- Opening of the regeneration valves
- Switching-on of blower and heater

Now, the moisture-saturated vessel **B1** is in the desorption phase, while adsorption vessel **B2** takes over the drying of the compressed air.

Overview of the Functional Sequence

				B1	B2
Total cycle time		Cycle time		Adsorption	Pressure relief
				Adsorption	Desorption
				Adsorption	Cooling
				Adsorption	Pressure build-up
				Adsorption	Standby
				Adsorption	Adsorption
		Cycle time		Pressure relief	Adsorption
				Desorption	Adsorption
				Cooling	Adsorption
				Pressure build up	Adsorption
				Standby	Adsorption
				Adsorption	Adsorption

Switch-over